Concealed Geared Hinges

SL11 120" LL

All dimensions are measured in inches and [millimeters] from the top of the door to the centerline of the holes and ATW panels.

Choose location for ATW prep. ATW4 = 1 location; ATW8 = 1 location; and ATW12 = 1 location.

NOTE: All unspecified angles default to 90°. To avoid an upcharge, 180° openings must be clearly specified at the time of order. There will be an upcharge for 180° ATW cover plates when ordered separately and finish (Clear, Bronze or Black) must be specified.

SL11 Profile

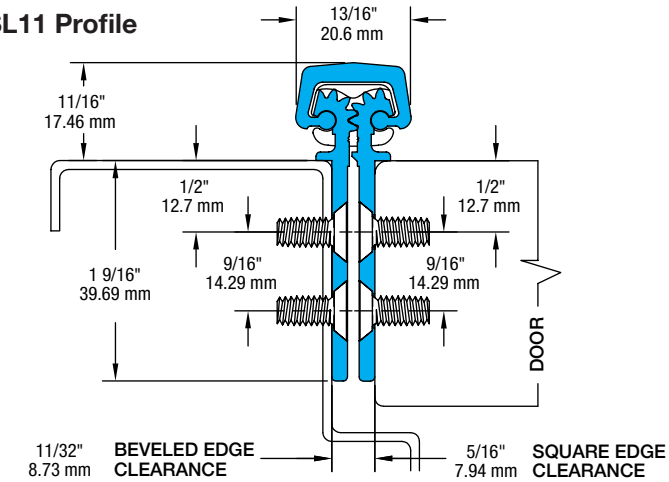

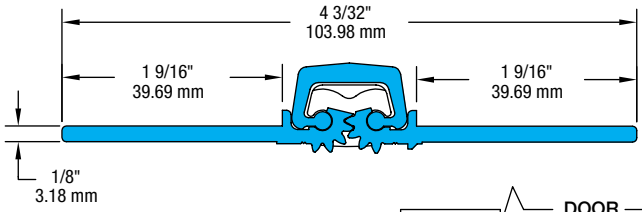

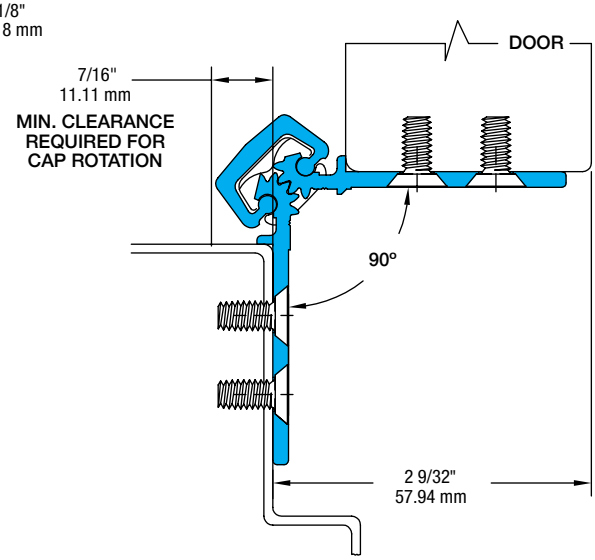

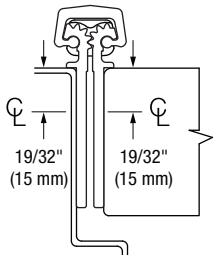

A 3/4" (19mm) clearance hole is required in the door and frame for the ATW wires.

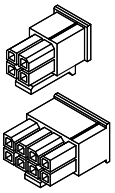

4-pin and/or 8-pin connectors are supplied at the end of the 8" (203.2mm) lead.

68 fasteners / 47 bearings

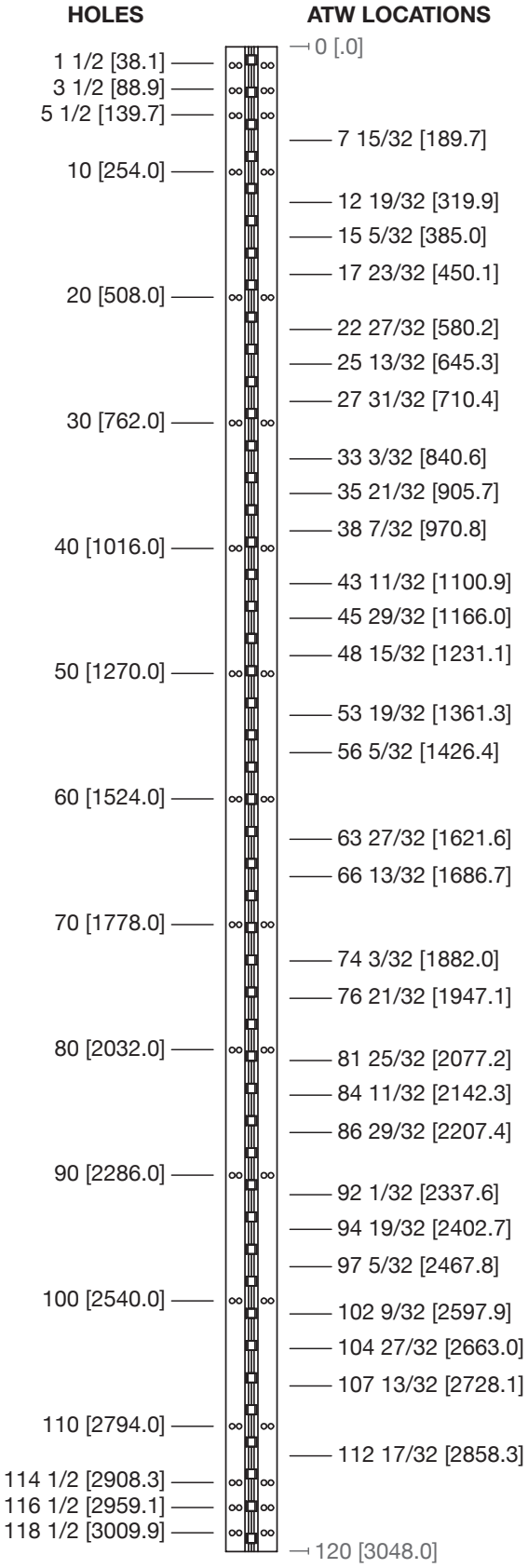

© 2026 SELECT Products Limited 032426